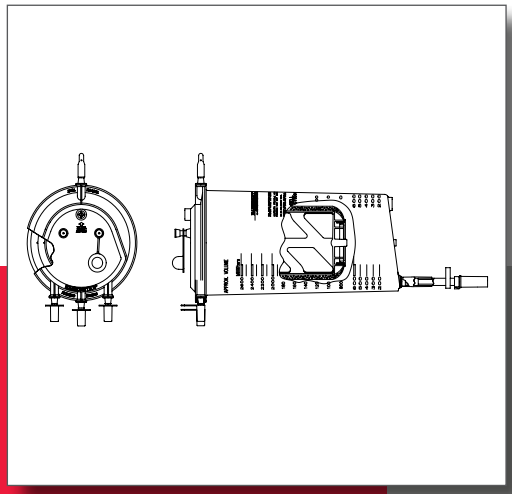

Reservoir

Surgical collection reservoir

REF 00205-00

- LN 00205-00 is a collection reservoir for cell saving applications
- For use with intra- and postoperative applications
- Rigid container for collection of shed blood
- Multiple cycle collection and drainage capability
- Capable for high volumes of shed blood and for collection of drainage blood
- Reduced hold-up volume
- Pressure relief valve



Technical Information

Disposable definition	
Capacity	3000 ml
Filter	150 µm filter
Sterilization method	EtO
Packaging	4 units/case

Associated Products

Aspiration & anticoagulant line	00208-00, 1400E-00, HAR-A-1003
Postoperative Drainage line	01500-SP, 01500-LL, 01500-BB, 01500-FR
IV-pole bracket for reservoir container	02116-00

© 2015 Haemonetics Corporation. Haemonetics and Haemonetics THE Blood Management Company are trademarks or registered trademarks of Haemonetics Corporation in the USA, other countries, or both. 07.2015, Germany. COL-FS-000209-IE(AA)

HAEMONETICS®
THE Blood Management Company®